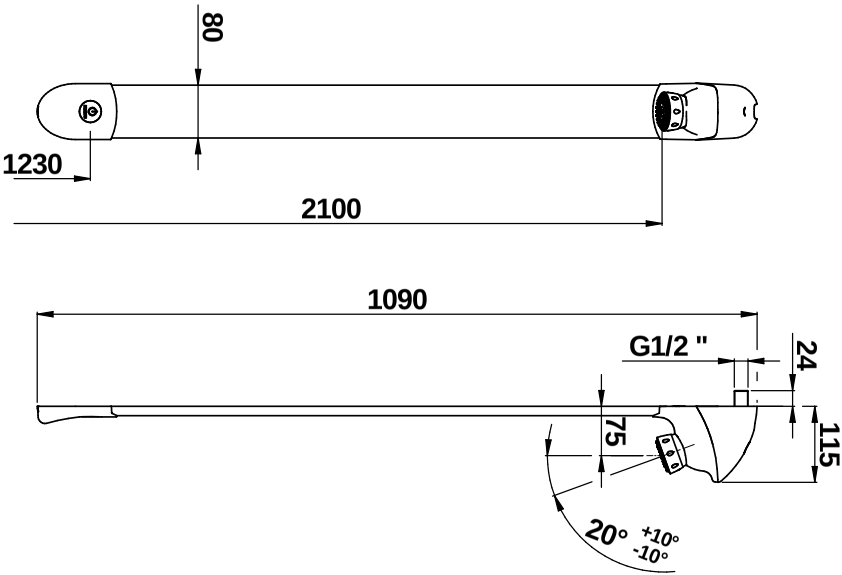
80
1230
2100
1090
G1/2 "
24
75
115
20°
+10°
-10°