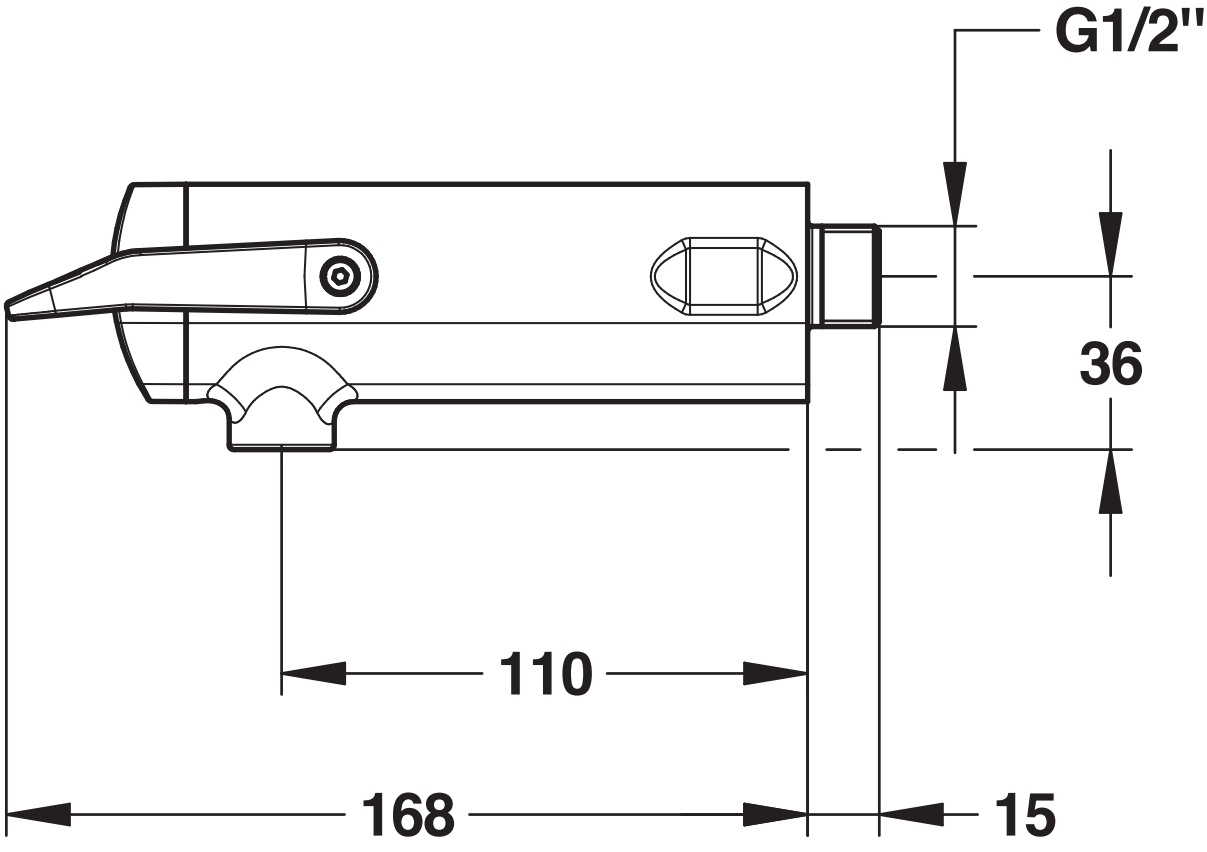
G1/2"
36
110
168
15