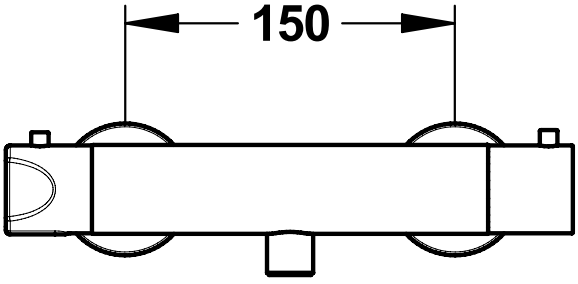
150

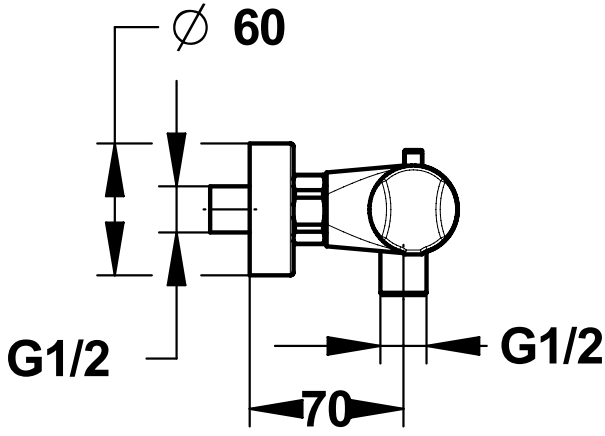
∅ 60
G1/2
G1/2
70

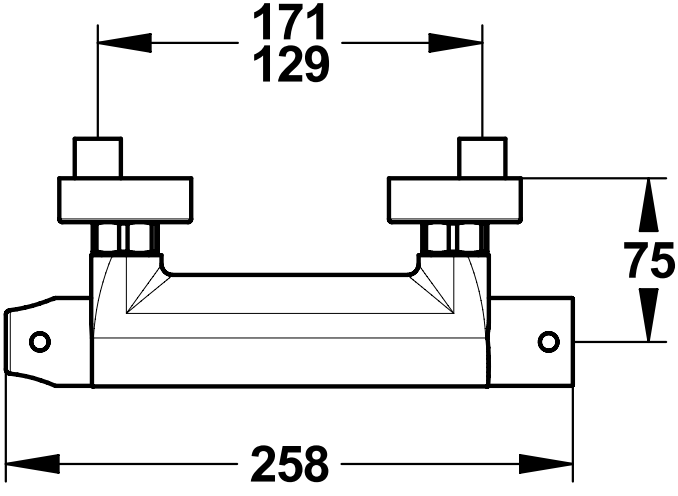
171
129
75
258