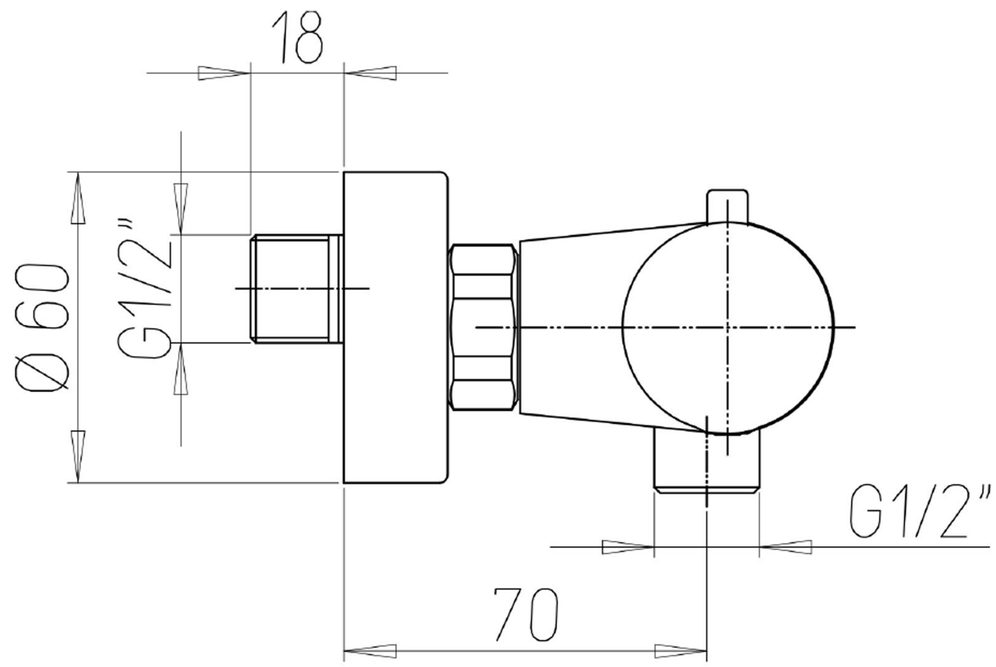
18
Ø 60
G1/2"
G1/2"
70

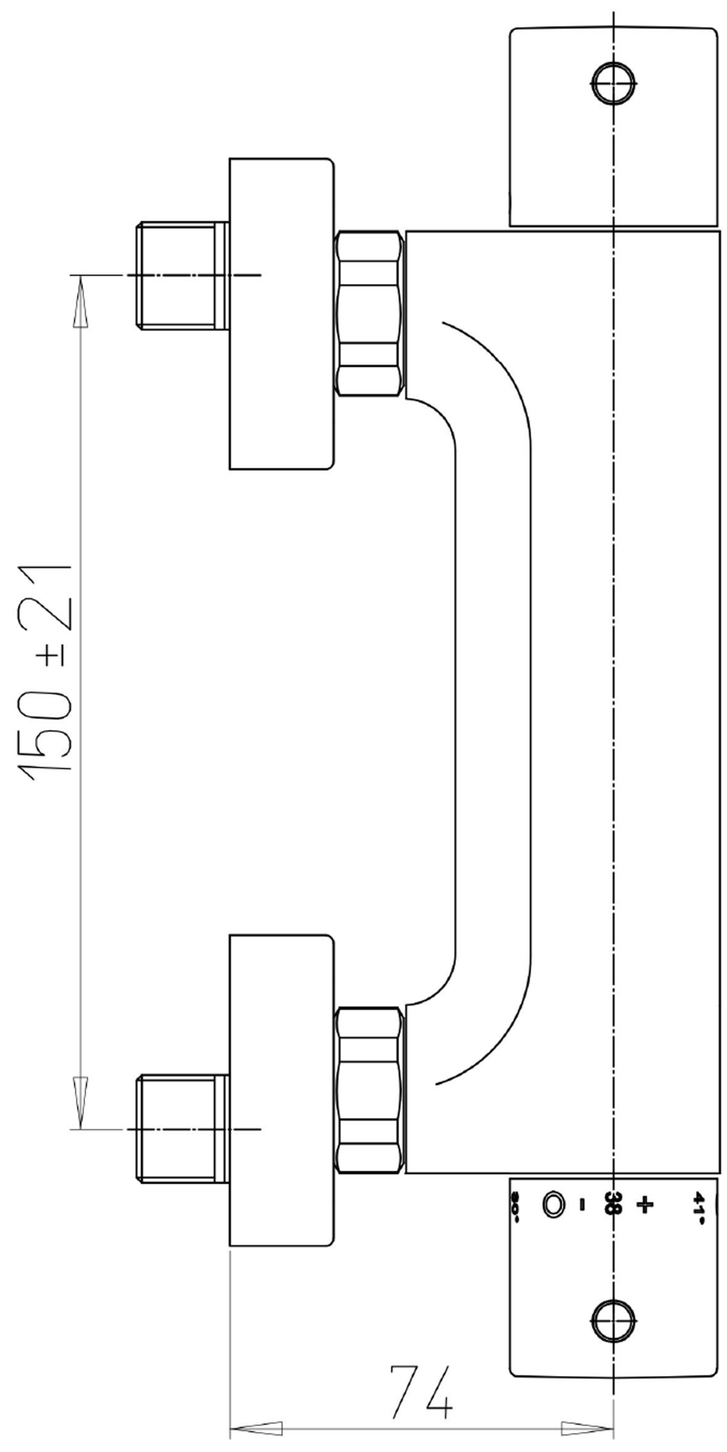
150 ±21
74