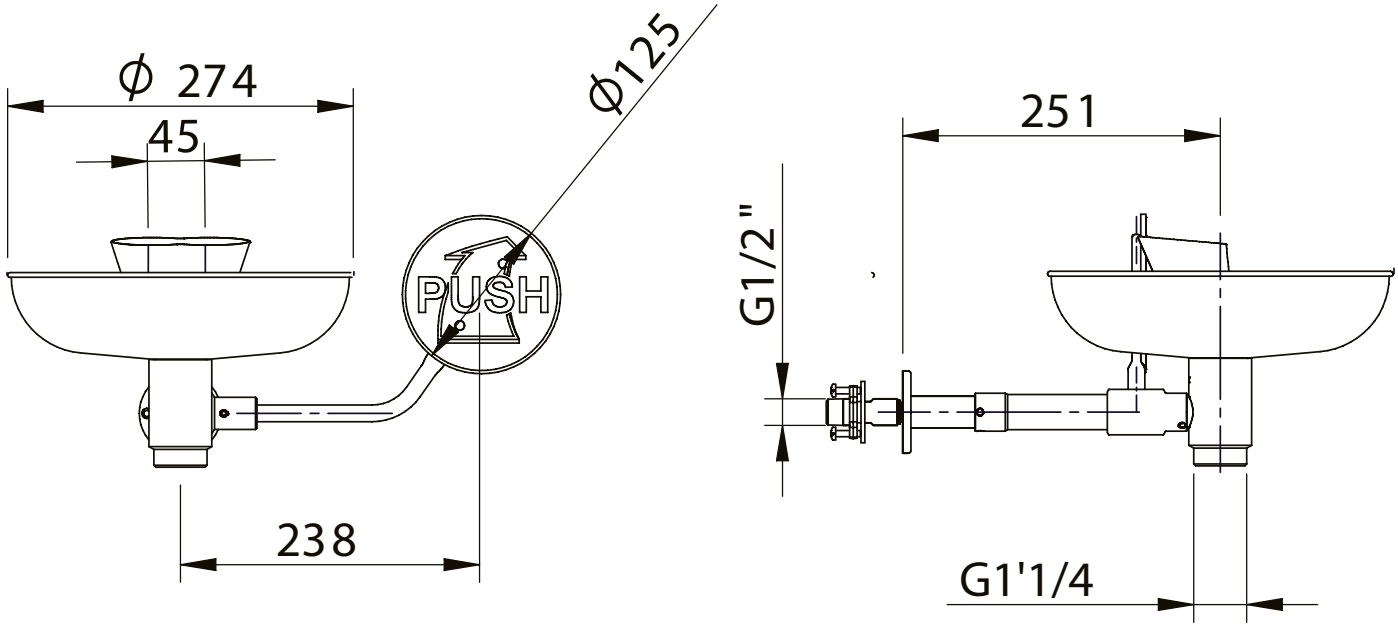
Ø 274
45
Ø125
PUSH
238
251
G1/2"
G1'1/4