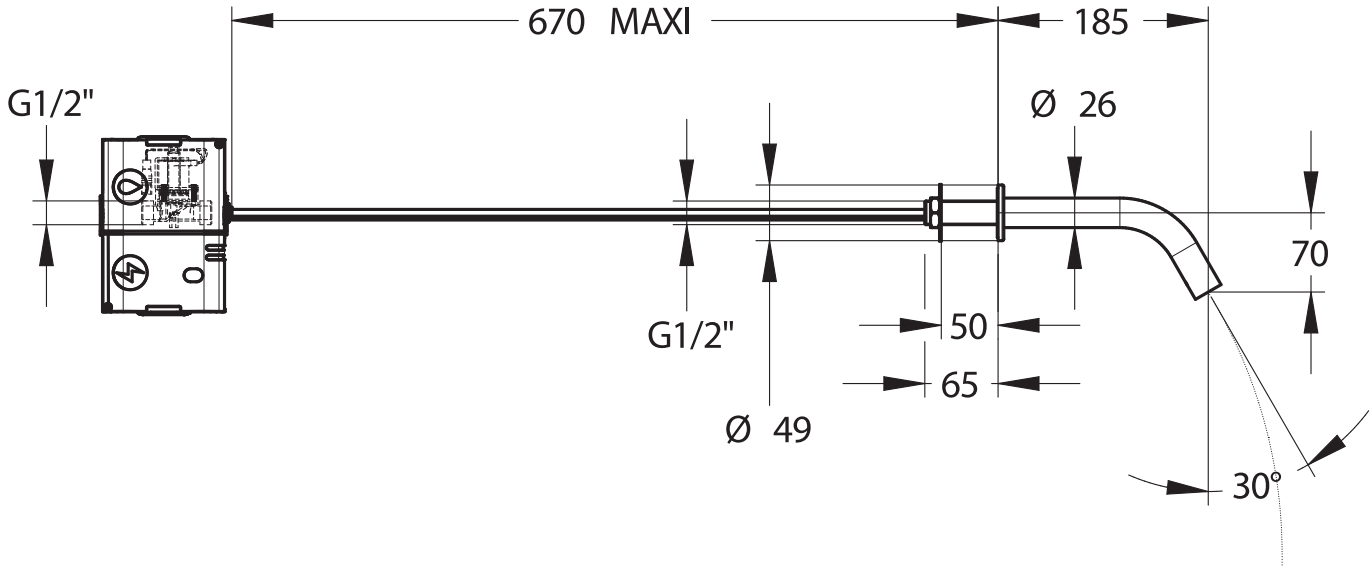
670 MAXI
185
G1/2"
Ø 26
70
G1/2"
50
65
Ø 49
30°