sanifirst

SANITARYWARE | HEALTHCARE
LABORATORIES | DISABLED

TECHNICAL DATASHEET

HEALTHCARE TAPWARE

Complete green star-shaped flow straightener M24x1 - 75775

Benefits of the product

- Fight against the development of bacteria
- Ensures better monitoring: easily identifiable color
- Available in 4 colors: each color = one cycle
- Save time for technicians: quick visual check
- Possible maintenance program (recommended frequency: quarterly to annual *)
- Clear laminar jet
- No air intake

Description

Green M24X100 star-shaped flow straightener with chrome cage (by 10 pieces).
10-year warranty. Sanifirst brand. REF : 75775 or approved equivalent.

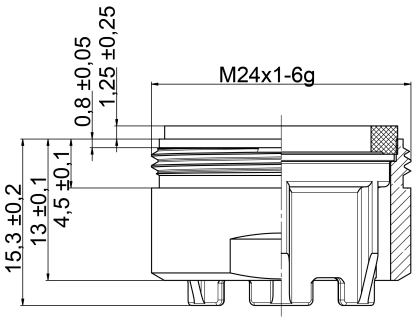

SANIFIRST - HEALTHCARE SANITARY EXPERT
Z.I. N°3 - BP 51 -16160 GOND-PONTOUVRE - FRANCE - +33(0)5 45 20 59 00 - www.sanifirst.com

sanifirst

SANITARYWARE | HEALTHCARE
LABORATORIES | DISABLED

TECHNICAL DATASHEET

Additional Information

Product reference	75775
Previous reference	NC
Brand	Sanifirst
Warranty	3 years against manufacturing defects
Clip-on spout	No
Flow straightener	M24 X 1 star-shaped flow straightener