sanifirst

SANITARYWARE | HEALTHCARE
LABORATORIES | DISABLED

TECHNICAL DATASHEET

HEALTHCARE TAPWARE

Male/female blue star-shaped flow straightener - 75783

Benefits of the product

- Fight against the development of bacteria
- Ensures better monitoring: easily identifiable color
- Available in 4 colors: each color = one cycle
- Save time for technicians: quick visual check
- Possible maintenance program (recommended frequency: quarterly to annual *)
- Clear laminar jet
- No air intake

Description

Blue male/female star-shaped flow straightener (by 10 pieces). 10-year warranty.
Sanifirst brand REF : 75783 or approved equivalent.

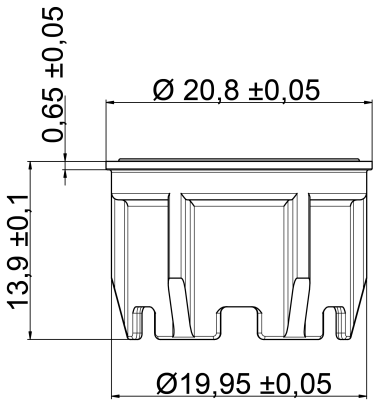

SANIFIRST - HEALTHCARE SANITARY EXPERT
Z.I. N°3 - BP 51 -16160 GOND-PONTOUVRE - FRANCE - +33(0)5 45 20 59 00 - www.sanifirst.com

SANITARYWARE | HEALTHCARE
LABORATORIES | DISABLED

TECHNICAL DATASHEET

Additional Information

Product reference	75783
Previous reference	NC
Brand	Sanifirst
Warranty	3 years against manufacturing defects
Clip-on spout	No
Flow straightener	Star shaped flow straightener, male/female